PMC Module

IO PMC/722

N, E, K - Series

PMC Graphics Adaptor

RoHS 2002/95/EC

APPLICATIONS

The IO PMC/722 is a versatile graphics adaptor suitable for any PMC compliant host board (CompactPCI®, VME etc). The on-board Silicon Motion SM722 3D/2D dual display controller manages the graphics processing. The adaptor supports digital flat panel (DFP) displays with a Transition Minimized Differential Signaling (TMDS) interface and CRT monitors with an analog RGB interface. Both interfaces can be configured by the user to output via the front panel DVI-I connector or PMC P4.

Each interface is capable of displaying resolutions up to 1280 x 1024 with up to 24-bit color depth. They can be driven simultaneously with the same or different images. Market applications are varied, but include the industrial, control, transportation, defense and security sectors. The IO PMC/722 is also available in ruggedized conduction-cooled and ruggedized air-cooled versions.

HIGHLIGHTS

- High performance 3D/2D dual display controller:
  - 8 Mbytes of internal DRAM
  - supports resolutions up to 1280 x 1024 pixels
  - supports color depth up to 24-bit
  - supports refresh rates up to 85Hz
- Supporting CRT and DFP interfaces:
  - with simultaneous CRT/DFP and DFP/DFP capability
  - CRT and DFP PanelLink® TMDS™ both available via front panel DVI-I connector and PMC P4
- PMC (PCI Mezzanine Card) format:
  - single size CMC (Common Mezzanine Card)
  - 33MHz, 32-bit PCI bus interface
  - 3.3V and 5V PCI signaling supported
- 64 Kbytes EPROM for video BIOS
- Extended temperature versions available:
  - 0°C to +55°C (N-Series)
  - -25°C to +70°C (E-Series)
  - -40°C to +85°C (K-Series, includes humidity sealant)
- Ruggedized air-cooled version (RA-Series) also available:
  - -40°C to +75°C
  - conformally coated
  - see separate IO PMC/722-RA datasheet
- Ruggedized conduction-cooled version (RC-Series) also available:
  - conduction-cooled to ANSI/VITA 20-2001 (R2005)
  - -40°C to +85°C
  - conformally coated
  - see separate IO PMC/722-RC datasheet
- Supported by Windows® 2000, Windows® XP, Windows® XP Embedded, Linux® and QNX®
- For use with VME bus, CompactPCI and other PMC host boards

CONCURRENT TECHNOLOGIES

Concurrent Technologies Plc 4 Gilberd Court, Colchester, Essex, CO4 9WN, UK
Tel: +44 (0)1206 752626 Fax: +44 (0)1206 751116

Concurrent Technologies Inc 6 Tower Office Park, Woburn, MA 01801, USA
Tel: (781) 933 5900 Fax: (781) 933 5911

email: info@gocct.com **http://www.gocct.com**

Specification

Graphics Processor
- utilizes Silicon Motion™ SM722 3D/2D dual display controller, which provides:-
  - dual display capability
  - resolutions up to 1280 x 1024
  - 24-bit true color
  - picture rotation of 90°, 180° or 270°
  - embedded 8 Mbytes DRAM
  - integrated 235MHz RAMDAC
  - 128-bit graphics engine
  - hardware accelerated support for Microsoft® DirectX 9
  - supports OpenGL 2.0 under Windows® and Linux®
  - PCI bus interface

CRT Interface
- up to 1280 x 1024 pixels, 24-bit color @ 85Hz refresh rate
- supports analog RGB compliant displays:-
  - front panel I/O via DVI-I connector
  - rear I/O via P4
  - front or rear I/O is user selectable

Flat Panel Interface
- PanelLink® interface provided by Silicon Image SiI 164 utilizing TMDS™ (Transition Minimized Differential Signaling):-
  - supports active matrix (TFT) and passive (DSTN) panels
  - up to 1280 x 1024 pixels @ 60Hz refresh rate
  - up to 24-bit color
  - supports twisted-pair cable, up to 5 meters in length
- supports Digital Flat Panel (DFP) displays:-
  - front panel I/O via DVI-I connector
  - rear I/O via P4
  - front or rear I/O is user selectable

Dual Display Operation
- DFP and CRT displays can be driven simultaneously with:-
  - the same or different images
  - the same resolution
  - the same or different refresh rate
- dependent on operating system software
- maximum recommended settings:-
  - 1024 x 768 pixels for one image and 1280 x 1024 for the other
  - 16-bit color depth

PMC Interface
- complies with PCI protocol and electrical specification:-
  - 33 MHz, 32-bit PCI bus interface
  - supports 3.3V and 5V signaling levels

BIOS EPROM
- 8-bit wide 64 Kbyte Flash EPROM

Software Support
- support for Windows 2000, Windows XP, Windows XP Embedded, Linux and QNX

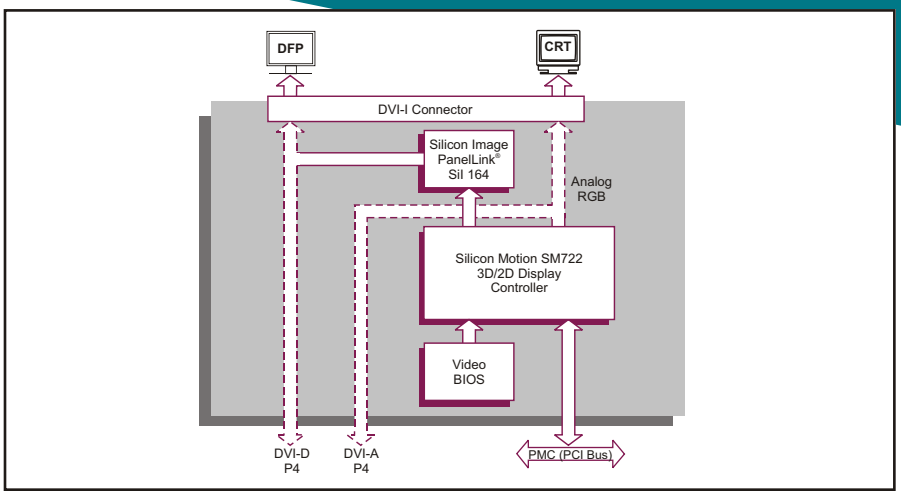

Electrical Specification
- requires 3.3V and 5V supplies
- +5V @ 0.22A; +/-5%
- +3.3V @ 0.4A; +/-5%
- +12V and -12V supplies not utilized

Safety
- PCB (PWB) manufactured with flammability rating of 94V-0

Environmental Specification
- operating temperatures:-
  - 0°C to +55°C (N-Series)
  - -25°C to +70°C (E-Series)
  - -40°C to +85°C (K-Series)
- storage temperatures:-
  - -40°C to +85°C
- Relative Humidity, non condensing (operating and storage):-
  - 10% to 90%
  - K-Series includes humidity sealant
- ruggedized air-cooled version available:-
  - see separate IO PMC/722-RA datasheet
- ruggedized conduction-cooled version available:-
  - see separate IO PMC/722-RC datasheet

Mechanical Specification
- single size CMC (Common Mezzanine Card) 74mm x 149mm
- 10mm height stack module
- shock:
  20g, 11ms, ½ sine (operating);
  30g, 11ms, ½ sine (non-operating)
- vibration:
  5Hz-2000Hz at 2g, 0.38mm peak displacement (operating);
  5Hz-2000Hz at 5g, 0.76mm peak displacement (non-operating)

ORDERING INFORMATION

Order Number	Product Description (Hardware)
IO PMC/722-00	PMC Graphics Adaptor with DFP and VGA interfaces via DVI-I connector and PMC P4, with a DVI-I to HD15 adaptor
CB DVI/121-00	DVI-I to HD15 adaptor (spare - this adaptor is supplied with IO PMC/722)
CB DVI/122-00	DVI-I connector Y-split cable to VGA HD15 connector & DVI-D connector

For extended temperature operation (E and K-Series) please contact your local sales office
For ruggedized conduction-cooled version, see separate IO PMC/722-RC datasheet
For ruggedized air-cooled version, see separate IO PMC/722-RA datasheet

All companies and product names are trademarks of their respective organizations.
Specification subject to change; E and OE. RoHS 2002/95/EC compliant.

Datasheet Code 1563/0509
© Concurrent Technologies 2009